# Work Order ID 66360

*Friday, February 11, 2011 1:14:37 PM*



**Item ID:** D206-642-541 **Accept** **Setup** **Start**

**Revision ID:** **Stop**

**Item Name:** Replacement Skidtube

**Start Date:** 2/14/2011 **Start Qty:** 1.00 **Cust Item ID:**

**Required Date:** 2/28/2011 **Req'd Qty:** 1.00 **Customer:**

**Reference:**

**Run** **Start** **Stop**

**Approvals:** **Process Plan:** MF **Date:** 11-02-11 **Tooling:** _____ **Date:** _____

**QC:** _____ **Date:** _____ **SPC (Y/N):** _____ **Date:** _____

| Sequence ID/ Work Center ID | Operation Description | Set Up/ Run Hours | Tool ID | Tool # | Plan Code | Accept Qty | Reject Qty | Reject Number | Insp. Stamp |
|---|---|---|---|---|---|---|---|---|---|
| 100 | | 0.00 | | | | | | | |
| DC | DOCUMENT CONTROL | | | | | | | | |
| Document Control | **Memo** | 0.00 | | | | | | | |
| | Photocopy bluefile & type labels per PPP D206-642-541 | | CHG003 | | | | | | |

| Draw Nbr | Revision Nbr |
|---|---|
| D3274 | D |
| IIN-D206-642 | Rev M |

N/A

Dart Aerospace Ltd

| W/O: | | WORK ORDER CHANGES | | | | | |
|---|---|---|---|---|---|---|---|
| DATE | STEP | PROCEDURE CHANGE | By | Date | Qty | Approval Chief Eng / Prod Mgr | Approval QC Inspector |
| | | | | | | | |
| | | | | | | | |

**Part No:** _____ **PAR #:** _____ **Fault Category:** _____ **NCR:** Yes No **DQA:** _____ **Date:** _____

**Resolution:** _____ **Disposition:** _____ **QA: N/C Closed:** _____ **Date:** _____

| NCR: | | WORK ORDER NON-CONFORMANCE (NCR) | | | | | | |
|---|---|---|---|---|---|---|---|---|
| DATE | STEP | Description of NC Section A | Corrective Action Section B | | | Verification Section C | Approval Chief Eng | Approval QC Inspector |
| | | | Initial Chief Eng | Action Description Chief Eng | Sign & Date | | | |
| | | | | | | | | |
| | | | | | | | | |
| | | | | | | | | |

**NOTE:** Date & initial all entries

H:\fFORMS\Quality Assurance\approved QA\NCRWO RevE

# Work Order ID 66360

*Friday, February 11, 2011 1:14:37 PM*



**Item ID:** D206-642-541 **Accept** **Setup Start** **Stop**

**Revision ID:**

**Item Name:** Replacement Skidtube

**Start Date:** 2/14/2011 **Start Qty:** 1.00 **Cust Item ID:**

**Required Date:** 2/28/2011 **Req'd Qty:** 1.00 **Customer:**

**Reference:**

**Run Start** **Stop**

**Approvals:** **Process Plan:** _____ **Date:** _____ **Tooling:** _____ **Date:** _____

**QC:** _____ **Date:** _____ **SPC (Y/N):** _____ **Date:** _____

| Sequence ID/ Work Center ID | Operation Description | Set Up/ Run Hours | Tool ID | Tool # | Plan Code | Accept Qty | Reject Qty | Reject Number | Insp. Stamp |
|---|---|---|---|---|---|---|---|---|---|
| 110 | | 0.00 | | | | | | | |
| Skidtubes | Skidtubes | | | | | | | | |
| Skidtubes | **Memo** | 0.00 | | | | | | | |

****VERIFY AND INSPECT THE MATERIAL PRIOR TO USE****

1- Bend FWD end of tube using bend prog D3274 FWD and foilo 10 as per dwg D3274, cut fwd end of tube with saw table setup D3274. DP 11-3-10

2- remove fwd indexing ridge as per dwg D3274. Prepare for welding

3- weld fwd cap as per dwg D3274 and QSI004
AR Aluminum Rod Batch M111385/M116577 BG 11/04/13

4- grind fwd cap weld on top surface only

5- Cut AFT end of tube at 170.9" as per dwg D3274 and deburr end.

6-Drill Aft cap pilot hole using DT8025

7 -Cleco DT8025 in position and install pilot hole drill Jig DT8742A,B,C,D. Drill 3/16" pilot holes as per Dwg D3274

8 -Remove inner indexing ridge on aft end of skidtube as per Dwg D3274 scribe batch #

9 -Open aft end cap holes to Ø0.208" as per Dwg D3274. Deburr aft end.

DP 11-4-14

Dart Aerospace Ltd

| W/O: | | WORK ORDER CHANGES | | | | | |
|---|---|---|---|---|---|---|---|
| DATE | STEP | PROCEDURE CHANGE | By | Date | Qty | Approval Chief Eng / Prod Mgr | Approval QC Inspector |
| | | | | | | | |
| | | | | | | | |

**Part No:** _____ **PAR #:** _____ **Fault Category:** _____ **NCR:** Yes No **DQA:** _____ **Date:** _____

**Resolution:** _____ **Disposition:** _____ **QA: N/C Closed:** _____ **Date:** _____

| NCR: | | WORK ORDER NON-CONFORMANCE (NCR) | | | | | | |
|---|---|---|---|---|---|---|---|---|
| DATE | STEP | Description of NC Section A | Corrective Action Section B | | | Verification Section C | Approval Chief Eng | Approval QC Inspector |
| | | | Initial Chief Eng | Action Description Chief Eng | Sign & Date | | | |
| | | | | | | | | |
| | | | | | | | | |
| | | | | | | | | |

**NOTE:** Date & initial all entries

# Work Order ID 66360

*Friday, February 11, 2011 1:14:37 PM*



**Item ID:** D206-642-541 **Accept** **Setup Start** **Stop**

**Revision ID:**

**Item Name:** Replacement Skidtube

**Start Date:** 2/14/2011 **Start Qty:** 1.00 **Cust Item ID:**

**Required Date:** 2/28/2011 **Req'd Qty:** 1.00 **Customer:**

**Reference:**

**Run Start** **Stop**

**Approvals:** **Process Plan:** _____ **Date:** _____ **Tooling:** _____ **Date:** _____

**QC:** _____ **Date:** _____ **SPC (Y/N):** _____ **Date:** _____

| Sequence ID/ Work Center ID | Operation Description | Set Up/ Run Hours | Tool ID | Tool # | Plan Code | Accept Qty | Reject Qty | Reject Number | Insp. Stamp |
|---|---|---|---|---|---|---|---|---|---|
| 114 | QC5- Inspect part completeness to step on W/O | 0.00 | | | | ~~m~~ | 11 | 04 | 15 (1) |
| QC | Memo | 0.00 | | | | | | | |
| Quality Control | | | | | | | | | |
| 116 | QC10- Inspect visual per QSI004- ground welds | 0.00 | | | | (1) | | | |
| QC | Memo | 0.00 | 8/16/04/18 | | | | | | |
| Quality Control | | | | | | | | | |
| 120 | Chemical Conversion Coat per QSI005 4.1 | 0.00 | | | | (1) | | | |
| HandFinish | Memo | 0.00 | SAD 11-09-18 | | | | | | |
| Hand Finishing | | | | | | | | | |

Dart Aerospace Ltd

| W/O: | | WORK ORDER CHANGES | | | | | |
|---|---|---|---|---|---|---|---|
| DATE | STEP | PROCEDURE CHANGE | By | Date | Qty | Approval Chief Eng / Prod Mgr | Approval QC Inspector |
| | | | | | | | |
| | | | | | | | |

**Part No:** _____ **PAR #:** _____ **Fault Category:** _____ **NCR:** Yes No **DQA:** _____ **Date:** _____

**Resolution:** _____ **Disposition:** _____ **QA: N/C Closed:** _____ **Date:** _____

| NCR: | | WORK ORDER NON-CONFORMANCE (NCR) | | | | | | |
|---|---|---|---|---|---|---|---|---|
| DATE | STEP | Description of NC Section A | Corrective Action Section B | | | Verification Section C | Approval Chief Eng | Approval QC Inspector |
| | | | Initial Chief Eng | Action Description Chief Eng | Sign & Date | | | |
| | | | | | | | | |
| | | | | | | | | |
| | | | | | | | | |

**NOTE:** Date & initial all entries

H:\fFORMS\Quality Assurance\approved QA\NCRWO RevE

# Work Order ID 66360

*Friday, February 11, 2011 1:14:37 PM*



**Item ID:** D206-642-541 **Accept** **Setup Start**

**Revision ID:** **Stop**

**Item Name:** Replacement Skidtube

**Start Date:** 2/14/2011 **Start Qty:** 1.00 **Cust Item ID:**

**Required Date:** 2/28/2011 **Req'd Qty:** 1.00 **Customer:**

**Reference:**

**Approvals:** **Process Plan:** _____ **Date:** _____ **Tooling:** _____ **Date:** _____ **Run Start**

**QC:** _____ **Date:** _____ **SPC (Y/N):** _____ **Date:** _____ **Stop**

| Sequence ID/ Work Center ID | Operation Description | Set Up/ Run Hours | Tool ID | Tool # | Plan Code | Accept Qty | Reject Qty | Reject Number | Insp. Stamp |
|---|---|---|---|---|---|---|---|---|---|
| 130 | QC3- Inspect Part Finish | 0.00 | | | | | | | |
| QC | Memo | 0.00 | | | | 11.05.11 | | | |
| Quality Control | | | | | | | | | |
| 150 | | 0.00 | | | | | | | |
| Skidtubes | Skidtubes | | | | | | | | |
| | Memo | 0.00 | | | | | | | |
| Skidtubes | 1-Open Ø0.313" and 0.375" crossbolt spacer holes as per Dwg D3274 | | | | | | | | |
| | 2-Deburr crossbolt spacer holes as per Dwg D3274 and blow out chips from inside the tube | | | | | 11.05.12 | | | |
| | 3-Bond web in place as per Dwg D3274 & QSI 015.<br>A/R Sikaflex-291 116945<br>Sikaflex expire date: 15 Jan 2012<br>Start: 11.05.12 Time: 8:00 am<br>Finish: 11.05.12 Time: 1:00 pm<br>(Adhere for 12 hours) | | | | | | | | |

Dart Aerospace Ltd

| W/O: | | WORK ORDER CHANGES | | | | | |
|---|---|---|---|---|---|---|---|
| DATE | STEP | PROCEDURE CHANGE | By | Date | Qty | Approval Chief Eng / Prod Mgr | Approval QC Inspector |
| | | | | | | | |
| | | | | | | | |

Part No: _____ PAR #: _____ Fault Category: _____ NCR: Yes No DQA: _____ Date: _____

Resolution: _____ Disposition: _____ QA: N/C Closed: _____ Date: _____

| NCR: | | WORK ORDER NON-CONFORMANCE (NCR) | | | | | | |
|---|---|---|---|---|---|---|---|---|
| DATE | STEP | Description of NC Section A | Corrective Action Section B | | | Verification Section C | Approval Chief Eng | Approval QC Inspector |
| | | | Initial Chief Eng | Action Description Chief Eng | Sign & Date | | | |
| | | | | | | | | |
| | | | | | | | | |
| | | | | | | | | |

**NOTE:** Date & initial all entries

H:\fFORMS\Quality Assurance\approved QA\NCRWO RevE

# Work Order ID 66360

*Friday, February 11, 2011 1:14:37 PM*



**Item ID:** D206-642-541 **Accept** **Setup Start** **Stop**

**Revision ID:**

**Item Name:** Replacement Skidtube

**Start Date:** 2/14/2011 **Start Qty:** 1.00 **Cust Item ID:**

**Required Date:** 2/28/2011 **Req'd Qty:** 1.00 **Customer:**

**Reference:**

**Run Start** **Stop**

**Approvals:** **Process Plan:** _____ **Date:** _____ **Tooling:** _____ **Date:** _____

**QC:** _____ **Date:** _____ **SPC (Y/N):** _____ **Date:** _____

| Sequence ID/ Work Center ID | Operation Description | Set Up/ Run Hours | Tool ID | Tool # | Plan Code | Accept Qty | Reject Qty | Reject Number | Insp. Stamp |
|---|---|---|---|---|---|---|---|---|---|
| 160 | QC5- Inspect part completeness to step on W/O | 0.00 | | | | 1 | 0 | | BE 11/05/B |
| QC | **Memo** | 0.00 | | | | | | | |
| Quality Control | | | | | | | | | |
| 170 | | 0.00 | | | | | | | |
| Skidtubes | Skidtubes | | | | | | | | |
| Skidtubes | **Memo** | 0.00 | | | | | | | |

Skidtubes

1-Bend AFT end of tube using bend prog. D3274 AFT as per dwg D3274. Install drop pins in crossbolt spacer holes to maintain web position.

DP 11-5-18

2- DRILL PILOT HOLES FOR WEARPLATES USING D3274-1T2
OPEN HOLES TO .297" . Deburr

3-DRILL TOE PIN HOLE .640" DIA AS PER DWG USING DT8935 FWD END OF TUBE
DEBURR INSIDE OF HOLE AS NECESSARY (DO NOT ENLARGE HOLES)
REMOVE ANY FOREIGN OBJECTS INSIDE OF TUBES

BB 11/05/24

4- Countersink crossbolt spacer holes as per Dwg D3274

5- prepare for welding

Dart Aerospace Ltd

| W/O: | | WORK ORDER CHANGES | | | | | |
|---|---|---|---|---|---|---|---|
| DATE | STEP | PROCEDURE CHANGE | By | Date | Qty | Approval Chief Eng / Prod Mgr | Approval QC Inspector |
| | | | | | | | |
| | | | | | | | |

**Part No:** _____ **PAR #:** _____ **Fault Category:** _____ **NCR:** Yes No **DQA:** _____ **Date:** _____

**Resolution:** _____ **Disposition:** _____ **QA: N/C Closed:** _____ **Date:** _____

| NCR: | | WORK ORDER NON-CONFORMANCE (NCR) | | | | | | |
|---|---|---|---|---|---|---|---|---|
| DATE | STEP | Description of NC Section A | Corrective Action Section B | | | Verification Section C | Approval Chief Eng | Approval QC Inspector |
| | | | Initial Chief Eng | Action Description Chief Eng | Sign & Date | | | |
| | | | | | | | | |
| | | | | | | | | |
| | | | | | | | | |

**NOTE:** Date & initial all entries

H:\fFORMS\Quality Assurance\approved QA\NCRWO RevE

# Work Order ID 66360

*Friday, February 11, 2011 1:14:37 PM*



**Item ID:** D206-642-541 **Accept** **Setup Start**

**Revision ID:** **Stop**

**Item Name:** Replacement Skidtube

**Start Date:** 2/14/2011 **Start Qty:** 1.00 **Cust Item ID:**

**Required Date:** 2/28/2011 **Req'd Qty:** 1.00 **Customer:**

**Reference:**

**Run Start**

**Approvals:** **Process Plan:** _____ **Date:** _____ **Tooling:** _____ **Date:** _____ **Stop**

**QC:** _____ **Date:** _____ **SPC (Y/N):** _____ **Date:** _____

| Sequence ID/ Work Center ID | Operation Description | Set Up/ Run Hours | Tool ID | Tool # | Plan Code | Accept Qty | Reject Qty | Reject Number | Insp. Stamp |
|---|---|---|---|---|---|---|---|---|---|
| 180 | QC5- Inspect part completeness to step on W/O | 0.00 | 4.6° -2.94" BEND | | | BE | 1 | | 11/05/24 |
| QC | **Memo** | 0.00 | | | | | | | |
| Quality Control | | | | | | | | | |
| 190 | | 0.00 | | | | | | | |
| Skidtubes | Skidtubes | | | | | | | | |
| | **Memo** | 0.00 | | | | | | | |
| Skidtubes | 1-Insert D2649 & D3275-1 crossbolt spacers. Weld as per QSI 004 and Dwg D3274. Remember to back drill each hole before welding the other side. Use aluminum rod<br>A/R☐☐Aluminum Rod☐ MMB85 BE 11/05/24<br>3-Grind cross bolt welds flush as per Dwg D3274. 11/05/25<br>4-Counterbore 5/16" x 0.750" deep as per Dwg D3274 and deburr. BE 11/05/25 | | | | | | | | |

Dart Aerospace Ltd

| W/O: | | WORK ORDER CHANGES | | | | | |
|---|---|---|---|---|---|---|---|
| DATE | STEP | PROCEDURE CHANGE | By | Date | Qty | Approval Chief Eng / Prod Mgr | Approval QC Inspector |
| | | | | | | | |
| | | | | | | | |

**Part No:** _____ **PAR #:** _____ **Fault Category:** _____ **NCR:** Yes No **DQA:** _____ **Date:** _____

**Resolution:** _____ **Disposition:** _____ **QA: N/C Closed:** _____ **Date:** _____

| NCR: | | WORK ORDER NON-CONFORMANCE (NCR) | | | | | | |
|---|---|---|---|---|---|---|---|---|
| DATE | STEP | Description of NC Section A | Corrective Action Section B | | | Verification Section C | Approval Chief Eng | Approval QC Inspector |
| | | | Initial Chief Eng | Action Description Chief Eng | Sign & Date | | | |
| | | | | | | | | |
| | | | | | | | | |
| | | | | | | | | |

**NOTE:** Date & initial all entries

# Work Order ID 66360

*Friday, February 11, 2011 1:14:37 PM*



**Item ID:** D206-642-541 **Accept** **Setup Start**

**Revision ID:** **Stop**

**Item Name:** Replacement Skidtube

**Start Date:** 2/14/2011 **Start Qty:** 1.00 **Cust Item ID:**

**Required Date:** 2/28/2011 **Req'd Qty:** 1.00 **Customer:**

**Reference:**

**Run Start**

**Approvals:** **Process Plan:** _____ **Date:** _____ **Tooling:** _____ **Date:** _____

**Stop**

**QC:** _____ **Date:** _____ **SPC (Y/N):** _____ **Date:** _____

| Sequence ID/ Work Center ID | Operation Description | Set Up/ Run Hours | Tool ID | Tool # | Plan Code | Accept Qty | Reject Qty | Reject Number | Insp. Stamp |
|---|---|---|---|---|---|---|---|---|---|
| 200 | QC5- Inspect part completeness to step on W/O | 0.00 | | | | | | | |
| QC | Memo | 0.00 | | | | | | | |
| Quality Control | | | | | | | | | |
| 210 | QC10- Inspect visual per QSI004- ground welds | 0.00 | | | | | | | |
| QC | Memo | 0.00 | | | | | | | |
| Quality Control | | | | | | | | | |
| 220 | Pressure Wash per QSI005 4.3 | 0.00 | | | | | | | |
| HandFinish | Memo | 0.00 | | | | | | | |
| Hand Finishing | Re-alodine tube as per QSI 005 section 4.1.2.1 do not acid etch | | | | | | | | |

Dart Aerospace Ltd

| W/O: | | WORK ORDER CHANGES | | | | | |
|---|---|---|---|---|---|---|---|
| DATE | STEP | PROCEDURE CHANGE | By | Date | Qty | Approval Chief Eng / Prod Mgr | Approval QC Inspector |
| | | | | | | | |
| | | | | | | | |

**Part No:** _____ **PAR #:** _____ **Fault Category:** _____ **NCR:** Yes No **DQA:** _____ **Date:** _____

**Resolution:** _____ **Disposition:** _____ **QA: N/C Closed:** _____ **Date:** _____

| NCR: | | WORK ORDER NON-CONFORMANCE (NCR) | | | | | | |
|---|---|---|---|---|---|---|---|---|
| DATE | STEP | Description of NC Section A | Corrective Action Section B | | | Verification Section C | Approval Chief Eng | Approval QC Inspector |
| | | | Initial Chief Eng | Action Description Chief Eng | Sign & Date | | | |
| | | | | | | | | |
| | | | | | | | | |
| | | | | | | | | |

**NOTE:** Date & initial all entries

H:\fFORMS\Quality Assurance\approved QA\NCRWO RevE

# Work Order ID 66360

*Friday, February 11, 2011 1:14:37 PM*

**Item ID:** D206-642-541 **Accept** **Setup Start** **Stop**

**Revision ID:**

**Item Name:** Replacement Skidtube

**Start Date:** 2/14/2011 **Start Qty:** 1.00 **Cust Item ID:**

**Required Date:** 2/28/2011 **Req'd Qty:** 1.00 **Customer:**

**Reference:**

**Run Start** **Stop**

**Approvals:** **Process Plan:** _____ **Date:** _____ **Tooling:** _____ **Date:** _____

**QC:** _____ **Date:** _____ **SPC (Y/N):** _____ **Date:** _____

| Sequence ID/ Work Center ID | Operation Description | Set Up/ Run Hours | Tool ID | Tool # | Plan Code | Accept Qty | Reject Qty | Reject Number | Insp. Stamp |
|---|---|---|---|---|---|---|---|---|---|
| 230 | White Gloss(Ref:4.3.5.1) per QSI005 4.3-Alum | 0.00 | | | | 1x | Ø | m-f | 11/05/30 |
| Powdercoat<br>Powder Coating M116964 | **Memo**<br>START TIME: 10:15<br>OVEN TEMPERATURE: 320 °F<br>FINISH TIME: 10:45 | 0.00 | | | | | | | |
| 240 | QC3- Inspect Part Finish | 0.00 | | | | 1 | Ø | M | 11/06/02 |
| QC<br>Quality Control | **Memo** | 0.00 | | | | | | | |
| 250 | HandFinishing | 0.00 | | | | 1 | Ø | M | 11/06/02 |
| HandFinish<br>Hand Finishing | **Memo**<br>✓ 1-Install Nut Plate as per Dwg D3274. Apply LPS-3 to Nut Plate and rivets.<br>A/R☐N/A☐LPS-3☐ M109956<br>✓ 2-Install inserts as per Dwg D3274. Use a drop of Sikaflex inside insert holes a<br>A/R☐☐Sikaflex-291 ☐ M116945☐<br>Sikaflex expire date: ☐ 12/01 | 0.00 | | | | | | | |

Dart Aerospace Ltd

| W/O: | | WORK ORDER CHANGES | | | | | |
|---|---|---|---|---|---|---|---|
| DATE | STEP | PROCEDURE CHANGE | By | Date | Qty | Approval Chief Eng / Prod Mgr | Approval QC Inspector |
| | | | | | | | |
| | | | | | | | |

**Part No:** _____ **PAR #:** _____ **Fault Category:** _____ **NCR:** Yes No **DQA:** _____ **Date:** _____

**Resolution:** _____ **Disposition:** _____ **QA: N/C Closed:** _____ **Date:** _____

| NCR: | | WORK ORDER NON-CONFORMANCE (NCR) | | | | | | |
|---|---|---|---|---|---|---|---|---|
| DATE | STEP | Description of NC Section A | Corrective Action Section B | | | Verification Section C | Approval Chief Eng | Approval QC Inspector |
| | | | Initial Chief Eng | Action Description Chief Eng | Sign & Date | | | |
| | | | | | | | | |
| | | | | | | | | |
| | | | | | | | | |

**NOTE:** Date & initial all entries

# Work Order ID 66360

*Friday, February 11, 2011 1:14:37 PM*

**Item ID:** D206-642-541 **Accept** **Setup Start** **Stop**

**Revision ID:**

**Item Name:** Replacement Skidtube

**Start Date:** 2/14/2011 **Start Qty:** 1.00 **Cust Item ID:**

**Required Date:** 2/28/2011 **Req'd Qty:** 1.00 **Customer:**

**Reference:**

**Run Start** **Stop**

**Approvals:** **Process Plan:** _____ **Date:** _____ **Tooling:** _____ **Date:** _____

**QC:** _____ **Date:** _____ **SPC (Y/N):** _____ **Date:** _____

| Sequence ID/ Work Center ID | Operation Description | Set Up/ Run Hours | Tool ID | Tool # | Plan Code | Accept Qty | Reject Qty | Reject Number | Insp. Stamp |
|---|---|---|---|---|---|---|---|---|---|
| 260 | QC5- Inspect part completeness to step on W/O | 0.00 | | | | | | | |
| QC | **Memo** | 0.00 | | | | | | | |
| Quality Control | Inspect Nut Plate & Inserts | | | | | | | | |
| 270 | HAND FINISHING RESOURCE #1 | 0.00 | | | | 1 | 0 | | |
| HandFinish | **Memo** | 0.00 | | | | | | | |
| Hand Finishing | | | | | | | | | |

1-Install wearpads & gaskets as per Dwg D3274.

2-Install ring as per Dwg D3274
A/R☐☐Sikaflex-291 ☐ N1169445
Sikaflex expire date: ☐ 12/01

3-Inspect for foreign objects as per QSI 024

4-Spray inside of tube on both sides of web with LPS-3
A/R LPS-3 Batch: N/A

5-Install Aft Cap and seal with Sikaflex. Clean excess adhesive.
A/R☐☐Sikaflex-291 ☐ N1169445
Sikaflex expire date: ☐ 12/01

Dart Aerospace Ltd

| W/O: | | WORK ORDER CHANGES | | | | | |
|---|---|---|---|---|---|---|---|
| DATE | STEP | PROCEDURE CHANGE | By | Date | Qty | Approval Chief Eng / Prod Mgr | Approval QC Inspector |
| | | | | | | | |
| | | | | | | | |

**Part No:** _____ **PAR #:** _____ **Fault Category:** _____ **NCR:** Yes No **DQA:** _____ **Date:** _____

**Resolution:** _____ **Disposition:** _____ **QA: N/C Closed:** _____ **Date:** _____

| NCR: | | WORK ORDER NON-CONFORMANCE (NCR) | | | | | | |
|---|---|---|---|---|---|---|---|---|
| DATE | STEP | Description of NC Section A | Corrective Action Section B | | | Verification Section C | Approval Chief Eng | Approval QC Inspector |
| | | | Initial Chief Eng | Action Description Chief Eng | Sign & Date | | | |
| | | | | | | | | |
| | | | | | | | | |
| | | | | | | | | |

**NOTE:** Date & initial all entries

# Work Order ID 66360

*Friday, February 11, 2011 1:14:37 PM*



**Item ID:** D206-642-541 **Accept** **Setup Start** **Stop**

**Revision ID:**

**Item Name:** Replacement Skidtube

**Start Date:** 2/14/2011 **Start Qty:** 1.00 **Cust Item ID:**

**Required Date:** 2/28/2011 **Req'd Qty:** 1.00 **Customer:**

**Reference:**

**Run Start** **Stop**

**Approvals:** **Process Plan:** _____ **Date:** _____ **Tooling:** _____ **Date:** _____

**QC:** _____ **Date:** _____ **SPC (Y/N):** _____ **Date:** _____

| Sequence ID/ Work Center ID | Operation Description | Set Up/ Run Hours | Tool ID | Tool # | Plan Code | Accept Qty | Reject Qty | Reject Number | Insp. Stamp |
|---|---|---|---|---|---|---|---|---|---|
| 280 | QC5- Inspect part completeness to step on W/O | 0.00 | | | | | | | |
| QC | Memo | 0.00 | | | | | | | |
| Quality Control | | | | | | | | | |
| 290 | Identify as per dwg & Stock Location:_____ | 0.00 | | | | | | | |
| Packaging | Memo | 0.00 | | | | | | | |
| Packaging | | | | | | | | | |
| 300 | QC21- Final Inspection - Work Order Release | 0.00 | | | | | | | |
| QC | Memo | 0.00 | | | | | | | |
| Quality Control | | | | | | | | | |

8 w/66603

PPP 66369

11/6/08

11/6/08

MF

11-06-08

Dart Aerospace Ltd

| W/O: | | WORK ORDER CHANGES | | | | | |
|---|---|---|---|---|---|---|---|
| DATE | STEP | PROCEDURE CHANGE | By | Date | Qty | Approval Chief Eng / Prod Mgr | Approval QC Inspector |
| | | | | | | | |
| | | | | | | | |

**Part No:** _____ **PAR #:** _____ **Fault Category:** _____ **NCR:** Yes No **DQA:** _____ **Date:** _____

**Resolution:** _____ **Disposition:** _____ **QA: N/C Closed:** _____ **Date:** _____

| NCR: | | WORK ORDER NON-CONFORMANCE (NCR) | | | | | | |
|---|---|---|---|---|---|---|---|---|
| DATE | STEP | Description of NC Section A | Corrective Action Section B | | | Verification Section C | Approval Chief Eng | Approval QC Inspector |
| | | | Initial Chief Eng | Action Description Chief Eng | Sign & Date | | | |
| | | | | | | | | |
| | | | | | | | | |
| | | | | | | | | |

**NOTE:** Date & initial all entries

# Picklist Print

*Friday, February 11, 2011 1:14:33 PM*



8

**Work Order ID:** 66360

**Parent Item:** D206-642-541

**Parent Item Name:** Replacement Skidtube

**Start Date:** 2/14/2011 **Required Date:** 2/28/2011

**Start Qty:** 1.00 **Required Qty:** 1.00

**Comments:**
IPP Rev:B□05.09.23□Revised per D206-642 Rev. J□KJ/JLM
IPP Rev:C 07-02-23 Added SS Wearplates & Gaskets JLM□
IPP Rev:D 07-12-06 replace NAS1515H3L to D3672-1 DD
IPP Rev:E 08-04-17 as per PAR 08-015 DD verified by:EC
IPP Rev:F 08-06-02 add comment DD verified by:EC
IPP Rev:G 08-10-09 revise details DD verified byEC

| Component Item ID/ Item Name | Replacement Item ID | Mfg/ Purch | Bin Item | Primary Location | Last Location | Route Seq ID | Unit of Measure | Qty on Hand | Qty per Kit | Total Qty | Qty Issued | Date Issued | Status |
|---|---|---|---|---|---|---|---|---|---|---|---|---|---|
| D2600-1-190 | | Manufactured | No | | | 110 | Each | 43.0000 | 1 | 1 | | | |
| Extrusion Round 3" 206 | | | | | | | | | | | | | |
| | | | | **Location** | | **Loc Qty** | | **Loc Code** | | | | | |
| | | | | LG | | 43 | | | | | | | |
| | | | | 47575 | | 2 | | | | | | | |
| | | | | 59874 | | 41 | | | | | | | |
| D3285-1 | | Manufactured | No | | | 110 | Each | 114.0000 | 1 | 1 | | | |
| Cap | | | | | | | | | | | | | |
| | | | | **Location** | | **Loc Qty** | | **Loc Code** | | | | | |
| | | | | LG | | 114 | | | | | | | |
| | | | | 52511 | | 66 | | | | | | | |
| | | | | 52647 | | 48 | | | | | | | |
| D3282-041 | | Manufactured | No | | | 150 | Each | 4.0000 | 1 | 1 | | | |
| Float Web (206L/407) | | | | | | | | | | | | | |
| | | | | **Location** | | **Loc Qty** | | **Loc Code** | | | | | |
| | | | | LG | | 4 | | | | | | | |
| | | | | 65292 | | 1 | | | | | | | |
| | | | | 65293 | | 3 | | | | | | | |

66363 (1)

(1) 11-3-10

BB 11/04/13

11.05.11

Dart Aerospace Ltd

| W/O: | | WORK ORDER CHANGES | | | | | |
|---|---|---|---|---|---|---|---|
| DATE | STEP | PROCEDURE CHANGE | By | Date | Qty | Approval Chief Eng / Prod Mgr | Approval QC Inspector |
| | | | | | | | |
| | | | | | | | |

**Part No:** _____ **PAR #:** _____ **Fault Category:** _____ **NCR:** Yes No **DQA:** _____ **Date:** _____

**Resolution:** _____ **Disposition:** _____ **QA: N/C Closed:** _____ **Date:** _____

| NCR: | | WORK ORDER NON-CONFORMANCE (NCR) | | | | | | |
|---|---|---|---|---|---|---|---|---|
| DATE | STEP | Description of NC Section A | Corrective Action Section B | | | Verification Section C | Approval Chief Eng | Approval QC Inspector |
| | | | Initial Chief Eng | Action Description Chief Eng | Sign & Date | | | |
| | | | | | | | | |
| | | | | | | | | |
| | | | | | | | | |

**NOTE:** Date & initial all entries

H:\fFORMS\Quality Assurance\approved QA\NCRWO RevE

# Picklist Print

*Friday, February 11, 2011 1:14:33 PM*

**Work Order ID:** 66360

**Parent Item:** D206-642-541

**Parent Item Name:** Replacement Skidtube

**Start Date:** 2/14/2011 **Required Date:** 2/28/2011

**Start Qty:** 1.00 **Required Qty:** 1.00

| | | | | | | | | |
|---|---|---|---|---|---|---|---|---|
| D2649 | Manufactured | No | 190 | Each | 243.0000 | 12 | 12 | BE 11/05/24 |
| Cross Bolt Spacer | | | | | | | | B 68507 ×12 |

| Location | Loc Qty | Loc Code |
|---|---|---|
| LG | 243 | |
| 58545 | 2 | |
| 60652 | 4 | |
| 61496 | 2 | |
| 62889 | 11 | |
| 63359 | 3 | |
| 65317 | 221 | |

| | | | | | | | | |
|---|---|---|---|---|---|---|---|---|
| D3275-1 | Manufactured | No | 190 | Each | 53.0000 | 12 | 12 | BE 11/05/24 |
| Crossbolt Spacer | | | | | | | | B 66109 ×11 |
| | | | | | | | | B 67767 ×1 |

| Location | Loc Qty | Loc Code |
|---|---|---|
| LG | 53 | |
| 53453 | 8 | |
| 62399 | 1 | |
| 63546 | 19 | |
| 65295 | 25 | |

| | | | | | | | | |
|---|---|---|---|---|---|---|---|---|
| CR3212-4-03 | Purchased | No | 250 | Each | 1,863.000 | 2 | 2 | 11/06/01 |
| Cherry Rivet | | | | | | | | |

| Location | Loc Qty | Loc Code |
|---|---|---|
| ST311 | 1863 | MA110139 ×2 |
| 110153 | 35 | |
| 111359 | 5 | |
| 112314 | 2 | |
| 114436 | 448 | |
| 114450 | 31 | |
| 114859 | 1342 | |

Dart Aerospace Ltd

| W/O: | | WORK ORDER CHANGES | | | | | |
|---|---|---|---|---|---|---|---|
| DATE | STEP | PROCEDURE CHANGE | By | Date | Qty | Approval Chief Eng / Prod Mgr | Approval QC Inspector |
| | | | | | | | |
| | | | | | | | |

**Part No:** _____ **PAR #:** _____ **Fault Category:** _____ **NCR:** Yes No **DQA:** _____ **Date:** _____

**Resolution:** _____ **Disposition:** _____ **QA: N/C Closed:** _____ **Date:** _____

| NCR: | | WORK ORDER NON-CONFORMANCE (NCR) | | | | | | |
|---|---|---|---|---|---|---|---|---|
| DATE | STEP | Description of NC Section A | Corrective Action Section B | | | Verification Section C | Approval Chief Eng | Approval QC Inspector |
| | | | Initial Chief Eng | Action Description Chief Eng | Sign & Date | | | |
| | | | | | | | | |
| | | | | | | | | |
| | | | | | | | | |

**NOTE:** Date & initial all entries

# Picklist Print

*Friday, February 11, 2011 1:14:34 PM*

**Work Order ID:** 66360

**Parent Item:** D206-642-541

**Parent Item Name:** Replacement Skidtube

**Start Date:** 2/14/2011 **Required Date:** 2/28/2011

**Start Qty:** 1.00 **Required Qty:** 1.00

| | | | | | | | | |
|---|---|---|---|---|---|---|---|---|
| D3415-041 | Manufactured | No | 250 | Each | 25.0000 | 1 | 1 | |
| Nut Plate | | | | | | | | |

| Location | | Loc Qty | Loc Code | |
|---|---|---|---|---|
| ST056 | | 25 | | |
| | 33842 | 25 | | 1 |

| | | | | | | | | |
|---|---|---|---|---|---|---|---|---|
| CCR264SS3-3 | Purchased | No | 250 | Each | 154.0000 | 2 | 2 | |
| Cherry Rivet | | | | | | | | |

| Location | | Loc Qty | Loc Code | |
|---|---|---|---|---|
| ST311 | | 154 | | |
| | 112314 | 4 | M117086 | X2 |
| | 113539 | 44 | | |
| | 113973 | 106 | | |

| | | | | | | | | |
|---|---|---|---|---|---|---|---|---|
| ALS4-1032-130 | Purchased | No | 250 | Each | 1,355.000 | 78 | 78 | |
| Insert | | | | | | | | |

| Location | | Loc Qty | Loc Code | |
|---|---|---|---|---|
| PKG11 | | 1220 | | |
| | 114723 | 220 | M117331 | X78 |
| | 116864 | 1000 | | |
| ST282 | | 96 | | |
| | 110511 | 10 | | |
| | 115911 | 86 | | |
| ST381 | | 39 | | |
| | 114654 | 39 | | |

**Dart Aerospace Ltd**

| W/O: | | WORK ORDER CHANGES | | | | | |
|---|---|---|---|---|---|---|---|
| **DATE** | **STEP** | **PROCEDURE CHANGE** | **By** | **Date** | **Qty** | **Approval** Chief Eng / Prod Mgr | **Approval** QC Inspector |
| | | | | | | | |
| | | | | | | | |

**Part No:** _____ **PAR #:** _____ **Fault Category:** _____ **NCR:** Yes No **DQA:** _____ **Date:** _____

**Resolution:** _____ **Disposition:** _____ **QA: N/C Closed:** _____ **Date:** _____

| NCR: | | WORK ORDER NON-CONFORMANCE (NCR) | | | | | | |
|---|---|---|---|---|---|---|---|---|
| **DATE** | **STEP** | **Description of NC** Section A | **Corrective Action** Section B | | | **Verification** Section C | **Approval** Chief Eng | **Approval** QC Inspector |
| | | | **Initial** Chief Eng | **Action Description** Chief Eng | **Sign & Date** | | | |
| | | | | | | | | |
| | | | | | | | | |
| | | | | | | | | |

**NOTE:** Date & initial all entries

# Picklist Print

*Friday, February 11, 2011 1:14:34 PM*

**Work Order ID:** 66360

**Parent Item:** D206-642-541

**Parent Item Name:** Replacement Skidtube

**Start Date:** 2/14/2011 **Required Date:** 2/28/2011

**Start Qty:** 1.00 **Required Qty:** 1.00

| | | | | | | | | |
|---|---|---|---|---|---|---|---|---|
| D3536-15 | Manufactured | No | 270 | Each | 10.0000 | 1 | 1 | |
| Gasket | | | | | | | | |

| Location | | Loc Qty | Loc Code | |
|---|---|---|---|---|
| FP | | 1 | B66559 | V1 |
| | 56055 | 1 | | |
| FP011 | | 8 | | |
| | 63568 | 8 | | |
| FP11 | | 1 | | |
| | 59238 | 1 | | |

| | | | | | | | | |
|---|---|---|---|---|---|---|---|---|
| D3536-23 | Manufactured | No | 270 | Each | 11.0000 | 1 | 1 | |
| Gasket | | | | | | | | |

| Location | | Loc Qty | Loc Code | |
|---|---|---|---|---|
| FP011 | | 1 | | |
| | 63570 | 1 | B66560 | V1 |
| ST | | 10 | | |
| | 66240 | 10 | | |

| | | | | | | | | |
|---|---|---|---|---|---|---|---|---|
| D3536-35 | Manufactured | No | 270 | Each | 16.0000 | 1 | 1 | |
| Gasket | | | | | | | | |

| Location | | Loc Qty | Loc Code | |
|---|---|---|---|---|
| FP012 | | 16 | | |
| | 58683 | 1 | B67599 | V1 |
| | 63579 | 1 | | |
| | 65573 | 2 | | |
| | 66237 | 12 | | |

Dart Aerospace Ltd

| W/O: | | WORK ORDER CHANGES | | | | | |
|---|---|---|---|---|---|---|---|
| DATE | STEP | PROCEDURE CHANGE | By | Date | Qty | Approval Chief Eng / Prod Mgr | Approval QC Inspector |
| | | | | | | | |
| | | | | | | | |

**Part No:** _____ **PAR #:** _____ **Fault Category:** _____ **NCR:** Yes No **DQA:** _____ **Date:** _____

**Resolution:** _____ **Disposition:** _____ **QA: N/C Closed:** _____ **Date:** _____

| NCR: | | WORK ORDER NON-CONFORMANCE (NCR) | | | | | | |
|---|---|---|---|---|---|---|---|---|
| DATE | STEP | Description of NC Section A | Corrective Action Section B | | | Verification Section C | Approval Chief Eng | Approval QC Inspector |
| | | | Initial Chief Eng | Action Description Chief Eng | Sign & Date | | | |
| | | | | | | | | |
| | | | | | | | | |
| | | | | | | | | |

**NOTE:** Date & initial all entries

# Picklist Print

*Friday, February 11, 2011 1:14:34 PM*

**Work Order ID:** 66360

**Parent Item:** D206-642-541

**Parent Item Name:** Replacement Skidtube

**Start Date:** 2/14/2011 **Required Date:** 2/28/2011

**Start Qty:** 1.00 **Required Qty:** 1.00

| | | | | | | | | |
|---|---|---|---|---|---|---|---|---|
| D3536-39 | Manufactured | No | 270 | Each | 19.0000 | 1 | 1 | |
| Gasket | | | | | | | | |

| Location | Loc Qty | Loc Code | |
|---|---|---|---|
| FP012 | 18 | | |
| 63578 | 6 | | X1 |
| 66241 | 12 | | |
| FP12 | 1 | | |
| 58215 | 1 | | |

| | | | | | | | | |
|---|---|---|---|---|---|---|---|---|
| D3535-15 | Manufactured | No | 270 | Each | 3.0000 | 1 | 1 | |
| Wearshoe | | | | | | | | |

| Location | Loc Qty | Loc Code | |
|---|---|---|---|
| FP18 | 3 | B66558 | X1 |
| 63569 | 3 | | |

| | | | | | | | | |
|---|---|---|---|---|---|---|---|---|
| D3535-35 | Manufactured | No | 270 | Each | 12.0000 | 1 | 1 | |
| Wearshoe | | | | | | | | |

| Location | Loc Qty | Loc Code | |
|---|---|---|---|
| FP018 | 12 | B67598 | X1 |
| 65926 | 12 | | |

| | | | | | | | | |
|---|---|---|---|---|---|---|---|---|
| D3535-39 | Manufactured | No | 270 | Each | 13.0000 | 1 | 1 | |
| Wearshoe | | | | | | | | |

| Location | Loc Qty | Loc Code | |
|---|---|---|---|
| FP-18 | 13 | | |
| 64076 | 13 | | X1 |

Dart Aerospace Ltd

| W/O: | | WORK ORDER CHANGES | | | | | |
|---|---|---|---|---|---|---|---|
| DATE | STEP | PROCEDURE CHANGE | By | Date | Qty | Approval Chief Eng / Prod Mgr | Approval QC Inspector |
| | | | | | | | |
| | | | | | | | |

**Part No:** _____ **PAR #:** _____ **Fault Category:** _____ **NCR:** Yes No **DQA:** _____ **Date:** _____

**Resolution:** _____ **Disposition:** _____ **QA: N/C Closed:** _____ **Date:** _____

| NCR: | | WORK ORDER NON-CONFORMANCE (NCR) | | | | | | |
|---|---|---|---|---|---|---|---|---|
| DATE | STEP | Description of NC Section A | Corrective Action Section B | | | Verification Section C | Approval Chief Eng | Approval QC Inspector |
| | | | Initial Chief Eng | Action Description Chief Eng | Sign & Date | | | |
| | | | | | | | | |
| | | | | | | | | |
| | | | | | | | | |

**NOTE:** Date & initial all entries

# Picklist Print

*Friday, February 11, 2011 1:14:34 PM*

**Work Order ID:** 66360

**Parent Item:** D206-642-541

**Parent Item Name:** Replacement Skidtube

**Start Date:** 2/14/2011 **Required Date:** 2/28/2011

**Start Qty:** 1.00 **Required Qty:** 1.00

| | | | | | | | | | |
|---|---|---|---|---|---|---|---|---|---|
| D3535-23 | | Manufactured | No | 270 | Each | 5.0000 | 1 | 1 | |
| Wearshoe | | | | | | | | | |

| Location | | Loc Qty | Loc Code | |
|---|---|---|---|---|
| FP021 | | 5 | 1366236 | |
| | 63571 | 4 | | |

| | | | | | | | | | |
|---|---|---|---|---|---|---|---|---|---|
| D3537-3 | | Manufactured | No | 270 | Each | 30.0000 | 1 | 1 | |
| Wearpad | | | | | | | | | |

| Location | | Loc Qty | Loc Code | |
|---|---|---|---|---|
| FP17 | | 30 | 1366230 | |
| | 65929 | 30 | | |

| | | | | | | | | | |
|---|---|---|---|---|---|---|---|---|---|
| D3537-1 | | Manufactured | No | 270 | Each | 39.0000 | 9 | 9 | |
| Wearpad | | | | | | | | | |

| Location | | Loc Qty | Loc Code | |
|---|---|---|---|---|
| FP017 | | 39 | | |
| | 65057 | 39 | B68944 | |

| | | | | | | | | | |
|---|---|---|---|---|---|---|---|---|---|
| AN960C10L | NAS1149C0332R | Purchased | No | 270 | Each | 25.0000 | 80 | 80 | |
| washer | | | | | | | | | |

| Location | | Loc Qty | Loc Code | |
|---|---|---|---|---|
| ST245 | | 25 | M117291 | |
| | 107534 | 25 | | |

Dart Aerospace Ltd

| W/O: | | WORK ORDER CHANGES | | | | | |
|---|---|---|---|---|---|---|---|
| DATE | STEP | PROCEDURE CHANGE | By | Date | Qty | Approval Chief Eng / Prod Mgr | Approval QC Inspector |
| | | | | | | | |
| | | | | | | | |

**Part No:** _____ **PAR #:** _____ **Fault Category:** _____ **NCR:** Yes No **DQA:** _____ **Date:** _____

**Resolution:** _____ **Disposition:** _____ **QA: N/C Closed:** _____ **Date:** _____

| NCR: | | WORK ORDER NON-CONFORMANCE (NCR) | | | | | | |
|---|---|---|---|---|---|---|---|---|
| DATE | STEP | Description of NC Section A | Corrective Action Section B | | | Verification Section C | Approval Chief Eng | Approval QC Inspector |
| | | | Initial Chief Eng | Action Description Chief Eng | Sign & Date | | | |
| | | | | | | | | |
| | | | | | | | | |
| | | | | | | | | |

**NOTE:** Date & initial all entries

# Picklist Print

*Friday, February 11, 2011 1:14:34 PM*

**Work Order ID:** 66360

**Parent Item:** D206-642-541

**Parent Item Name:** Replacement Skidtube

**Start Date:** 2/14/2011 **Required Date:** 2/28/2011

**Start Qty:** 1.00 **Required Qty:** 1.00

| | | | | | | | | | |
|---|---|---|---|---|---|---|---|---|---|
| AN960C416 | NAS1149C0463R | Purchased | No | 270 | Each | 29.0000 | 1 | 1 | |
| washer | | | | | | | | M117735 | (x1) MH 11/06/01 |

| Location | | Loc Qty | Loc Code | |
|---|---|---|---|---|
| ST346 | | 29 | | |
| | 100993 | 29 | | |

| | | | | | | | | | |
|---|---|---|---|---|---|---|---|---|---|
| D3672-1 | | Manufactured | No | 270 | Each | 1,149.000 | 2 | 2 | |
| Phenolic Washer | | | | | | | | | MH 11/06/01 |

| Location | | Loc Qty | Loc Code | |
|---|---|---|---|---|
| ST077 | | 1149 | | |
| | 42329 | 10 | | |
| | 52505 | 139 | | |
| | 64177 | 1000 | | V2 |

| | | | | | | | | | |
|---|---|---|---|---|---|---|---|---|---|
| AN3C4A | | Purchased | No | 270 | Each | 1,420.000 | 80 | 80 | |
| BOLT | | | | | | | | | MH 11/06/01 |

| Location | | Loc Qty | Loc Code | |
|---|---|---|---|---|
| ST350 | | 1420 | M117313 | X80 |
| | 115300 | 25 | | |
| | 116075 | 361 | | |
| | 116590 | 34 | | |
| | 116704 | 1000 | | |

| | | | | | | | | | |
|---|---|---|---|---|---|---|---|---|---|
| AN4C5A | | Purchased | No | 270 | Each | 439.0000 | 1 | 1 | |
| BOLT | | | | | | | | | MH 11/06/01 |

| Location | | Loc Qty | Loc Code | |
|---|---|---|---|---|
| ST346 | | 439 | | |
| | 110552 | 1 | | |
| | 112243 | 438 | | X1 |

Dart Aerospace Ltd

| W/O: | | WORK ORDER CHANGES | | | | | |
|---|---|---|---|---|---|---|---|
| DATE | STEP | PROCEDURE CHANGE | By | Date | Qty | Approval Chief Eng / Prod Mgr | Approval QC Inspector |
| | | | | | | | |
| | | | | | | | |

**Part No:** _____ **PAR #:** _____ **Fault Category:** _____ **NCR:** Yes No **DQA:** _____ **Date:** _____

**Resolution:** _____ **Disposition:** _____ **QA: N/C Closed:** _____ **Date:** _____

| NCR: | | WORK ORDER NON-CONFORMANCE (NCR) | | | | | | |
|---|---|---|---|---|---|---|---|---|
| DATE | STEP | Description of NC Section A | Corrective Action Section B | | | Verification Section C | Approval Chief Eng | Approval QC Inspector |
| | | | Initial Chief Eng | Action Description Chief Eng | Sign & Date | | | |
| | | | | | | | | |
| | | | | | | | | |
| | | | | | | | | |

**NOTE:** Date & initial all entries

# Picklist Print

*Friday, February 11, 2011 1:14:34 PM*

**Work Order ID:** 66360

**Parent Item:** D206-642-541

**Parent Item Name:** Replacement Skidtube

**Start Date:** 2/14/2011 **Required Date:** 2/28/2011

**Start Qty:** 1.00 **Required Qty:** 1.00

| | | | | | | | | |
|---|---|---|---|---|---|---|---|---|
| D2646 | Manufactured | No | 270 | Each | 76.0000 | 1 | 1 | M 11/06/01 |
| Aft Cap | | | | | | | | |

| Location | Loc Qty | Loc Code | |
|---|---|---|---|
| FP-4 | 6 | | |
| 57332 | 6 | | |
| FP6 | 16 | | |
| 52663 | 3 | | |
| 62678 | 12 | | |
| 63633 | 1 | | |
| Return 2010 | 54 | | |
| 62678 | 54 | | XI |

| | | | | | | | | |
|---|---|---|---|---|---|---|---|---|
| D3413-1 | Manufactured | No | 270 | Each | 25.0000 | 1 | 1 | M 11/06/01 |
| Ring | | | | | | | | |

| Location | Loc Qty | Loc Code | |
|---|---|---|---|
| ST420 | 9 | | |
| 62961 | 9 | 1366945 | XI |
| ST473 | 16 | | |
| 51586 | 1 | | |
| 53446 | 5 | | |
| 65294 | 10 | | |

Dart Aerospace Ltd

| W/O: | | WORK ORDER CHANGES | | | | | |
|---|---|---|---|---|---|---|---|
| DATE | STEP | PROCEDURE CHANGE | By | Date | Qty | Approval Chief Eng / Prod Mgr | Approval QC Inspector |
| | | | | | | | |
| | | | | | | | |

**Part No:** _____ **PAR #:** _____ **Fault Category:** _____ **NCR:** Yes No **DQA:** _____ **Date:** _____

**Resolution:** _____ **Disposition:** _____ **QA: N/C Closed:** _____ **Date:** _____

| NCR: | | WORK ORDER NON-CONFORMANCE (NCR) | | | | | | |
|---|---|---|---|---|---|---|---|---|
| DATE | STEP | Description of NC Section A | Corrective Action Section B | | | Verification Section C | Approval Chief Eng | Approval QC Inspector |
| | | | Initial Chief Eng | Action Description Chief Eng | Sign & Date | | | |
| | | | | | | | | |
| | | | | | | | | |
| | | | | | | | | |

**NOTE:** Date & initial all entries

| DESIGN | DRAWN BY | DART AEROSPACE USA, INC. PORT HADLOCK, WA |
|---|---|---|
| CP | PH | |
| CHECKED | APPROVED | DRAWING NO. D3274 — REV. D — SHEET 1 OF 4 |
| DATE 06.12.19 | | TITLE SKIDTUBE ASSEMBLY — SCALE NTS |

| | | |
|---|---|---|
| A | 04.03.15 | NEW ISSUE |
| B | 04.08.09 | MOVE SADDLE HOLE: 42.14 WAS 42.76 |
| C | 05.03.16 | ADD –043; NEW INSERTS |
| D | 06.12.19 | NEW INSERTS, SS WEARSHOE + GASKET |

RELEASED
07.02.12
DEO ATTACHED

| Qty -041 | Qty -043 | Part Number | Description |
|---|---|---|---|
| X | | D3274-041 | SKIDTUBE ASSEMBLY |
| | X | D3274-043 | SKIDTUBE ASSEMBLY |
| | | | |
| 1 | 1 | D2600-1-240 | EXTRUSION |
| 1 | 1 | D2646 | AFT CAP |
| 12 | 12 | D2649 | CROSS BOLT SPACER |
| 12 | 37 | D3275-1 | CROSS BOLT SPACER |
| 1 | 1 | D3282-041 | FLOAT WEB |
| 1 | 1 | D3285-1 | CAP |
| 1 | 1 | D3413-1 | RING |
| 1 | 1 | D3415-041 | NUT PLATE |
| 1 | 1 | D3535-15 | WEARSHOE |
| 1 | 1 | D3535-23 | WEARSHOE |
| 1 | 1 | D3535-35 | WEARSHOE |
| 1 | 1 | D3535-39 | WEARSHOE |
| 1 | 1 | D3536-15 | GASKET |
| 1 | 1 | D3536-23 | GASKET |
| 1 | 1 | D3536-35 | GASKET |
| 1 | 1 | D3536-39 | GASKET |
| 9 | 9 | D3537-1 | WEARPAD |
| 1 | 1 | D3537-3 | WEARPAD |
| | | | |
| 78 | 78 | ALS7-1032-130 | INSERT (or AKS4-1032-130, ALS4-1032-130, AELS-1032-130) |
| 80 | 80 | AN3C4A | BOLT |
| 1 | 1 | AN4C5A | BOLT |
| 1 | 1 | AN960C416 | WASHER |
| 80 | 80 | AN960C10L | WASHER |
| 2 | 2 | CCR264SS3-3 | RIVET |
| 2 | 2 | CR3212-4-03 | RIVET |
| 2 | 2 | NAS1515H3L | WASHER |

#66280

**GENERAL NOTES:**

1. TOLERANCES ARE PER DART QSI 018 UNLESS OTHERWISE NOTED.
2. DAMAGE TOLERANCE ON FWD BEND:
   THERE SHOULD BE NO VISIBLE WRINKLES IN THE BEND FROM THE GROUND TO A HEIGHT OF 7 INCHES ABOVE THE GROUND. IT IS ACCEPTABLE TO POLISH OUT GOUGES UP TO 0.020 DEEP IN THE BENT PORTION OF THE TUBE. A MAXIMUM REDUCTION IN DIAMETER OF 0.150" IS ACCEPTABLE IN THE BENT PORTION OF THE TUBE.
3. ALL HOLES DRILLED ON CENTERLINES.
4. BOND D3282-041 FLOAT WEB INTO D3274-1/-3 OUTER TUBE WITH NON-STRUCTURAL SIKAFLEX-241/291 ADHESIVE PER DART QSI 015. ENSURE HOLES LINE-UP.
5. WELDING TO BE DONE PER DART QSI 004.
6. FINISH: - ACID ETCH, ALODINE ASSEMBLY PER DART QSI 005 4.1
   - POWDER COAT WHITE (REF. 4.3.5.1) PER DART QSI 005 4.3
7. DRILL Ø0.297 HOLES FOR ALS7-1032-130 INSERTS USING DT3274-1T2 BEFORE FINISH. INSTALL ALS7-1032-130 INSERTS AFTER FINISH. SEAL WEARSHOE BOLTS WITH SIKAFLEX -241/-291.
8. SPRAY INSIDE OF TUBE WITH A COAT OF LPS LABORATORIES "LPS-3" AFTER FINISH AND INSTALLATION OF INSERTS. COAT ALL EXPOSED FASTENERS WITH LPS LABORATORIES "LPS PROCYON" AFTER FINAL ASSEMBLY, CLEAN EXCESS OFF POWDER COATING WITH MEK DEGREASER.

**Copyright © 2004 by DART AEROSPACE USA, INC.**
THIS DOCUMENT IS PRIVATE AND CONFIDENTIAL AND IS SUPPLIED ON THE EXPRESS CONDITION THAT IT IS NOT TO BE USED FOR ANY PURPOSE OR COPIED OR COMMUNICATED TO ANY OTHER PERSON WITHOUT WRITTEN PERMISSION FROM DART AEROSPACE USA, INC.

Dart Aerospace Ltd

| W/O: | | WORK ORDER CHANGES | | | | | |
|---|---|---|---|---|---|---|---|
| DATE | STEP | PROCEDURE CHANGE | By | Date | Qty | Approval Chief Eng / Prod Mgr | Approval QC Inspector |
| | | | | | | | |
| | | | | | | | |

**Part No:** _____ **PAR #:** _____ **Fault Category:** _____ **NCR:** Yes No **DQA:** _____ **Date:** _____

**Resolution:** _____ **Disposition:** _____ **QA: N/C Closed:** _____ **Date:** _____

| NCR: | | WORK ORDER NON-CONFORMANCE (NCR) | | | | | | |
|---|---|---|---|---|---|---|---|---|
| DATE | STEP | Description of NC Section A | Corrective Action Section B | | | Verification Section C | Approval Chief Eng | Approval QC Inspector |
| | | | Initial Chief Eng | Action Description Chief Eng | Sign & Date | | | |
| | | | | | | | | |
| | | | | | | | | |
| | | | | | | | | |

**NOTE:** Date & initial all entries

H:\fFORMS\Quality Assurance\approved QA\NCRWO RevE

**DEO ATTACHED**

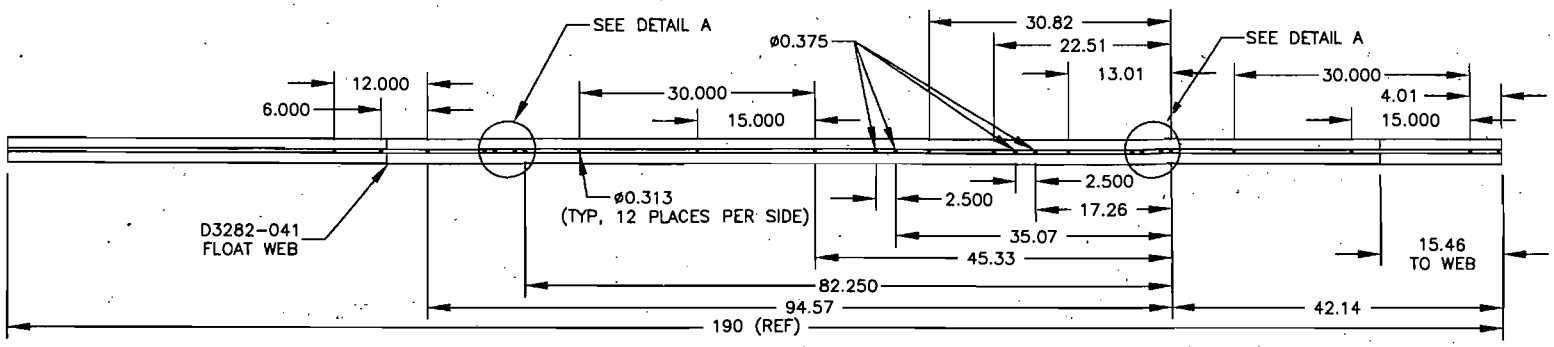


**D3274-041 DRILLING/ASSEMBLY DETAIL**

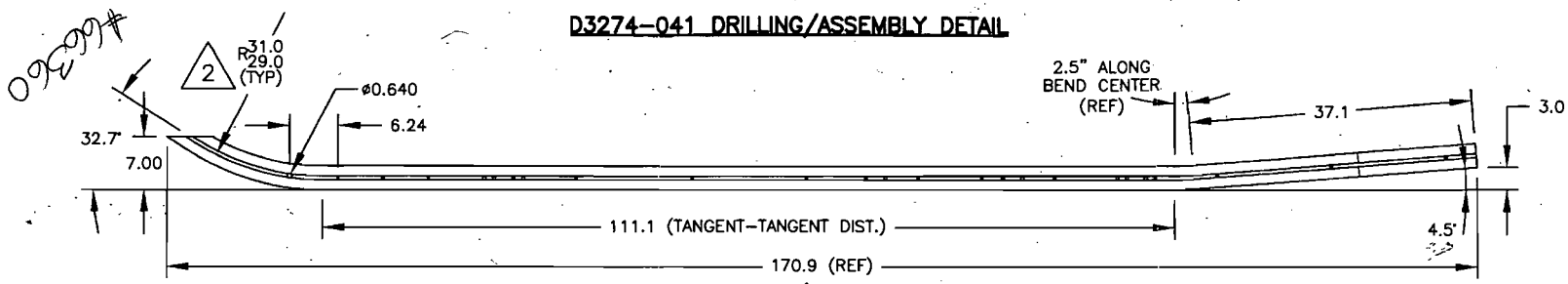


**D3274-041 BEND/DRILLING DETAIL**

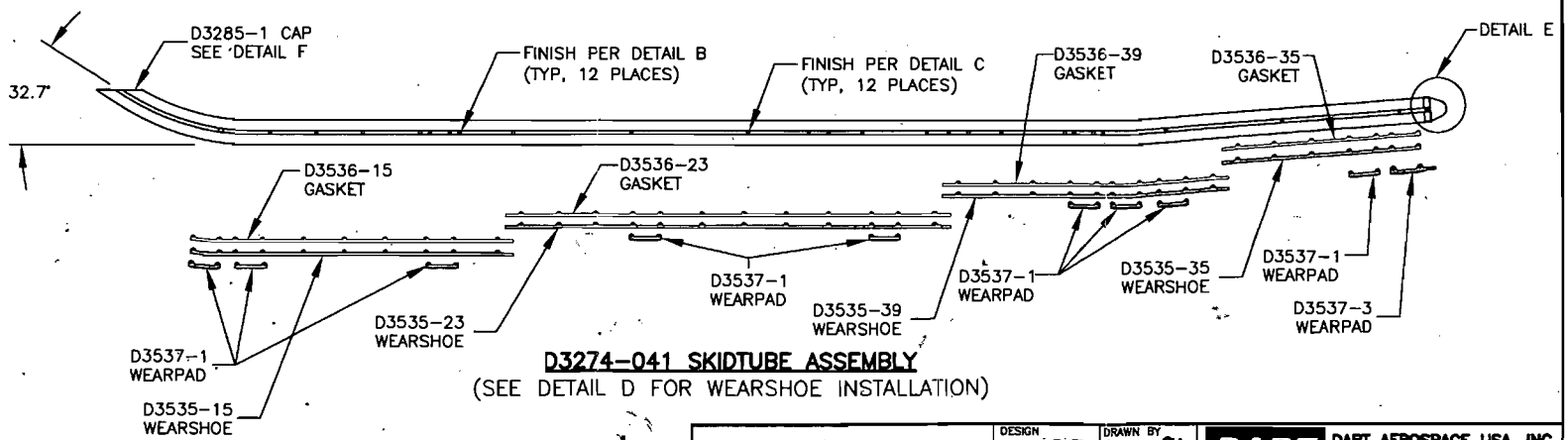


**D3274-041 SKIDTUBE ASSEMBLY**

(SEE DETAIL D FOR WEARSHOE INSTALLATION)

RELEASED
07.02.12

COPYRIGHT © 2004 BY DART AEROSPACE USA, INC.

THIS DOCUMENT IS PRIVATE AND CONFIDENTIAL AND IS SUPPLIED ON THE EXPRESS CONDITION THAT IT IS NOT TO BE USED FOR ANY PURPOSE OR COPIED OR COMMUNICATED TO ANY OTHER PERSON WITHOUT WRITTEN PERMISSION FROM DART AEROSPACE USA, INC.

| | | | |
|---|---|---|---|
| DESIGN: CP | DRAWN BY: PH | DART | DART AEROSPACE USA, INC. PORT HADLOCK, WA |
| CHECKED: | APPROVED: | DRAWING NO. D3274 | REV. D SHEET 2 OF 4 |
| DATE: 06.12.19 | | TITLE: SKIDTUBE ASSEMBLY | SCALE: 1:15 |

Dart Aerospace Ltd

| W/O: | | WORK ORDER CHANGES | | | | | |
|---|---|---|---|---|---|---|---|
| DATE | STEP | PROCEDURE CHANGE | By | Date | Qty | Approval Chief Eng / Prod Mgr | Approval QC Inspector |
| | | | | | | | |
| | | | | | | | |

**Part No:** _____ **PAR #:** _____ **Fault Category:** _____ **NCR:** Yes No **DQA:** _____ **Date:** _____

**Resolution:** _____ **Disposition:** _____ **QA: N/C Closed:** _____ **Date:** _____

| NCR: | | WORK ORDER NON-CONFORMANCE (NCR) | | | | | | |
|---|---|---|---|---|---|---|---|---|
| DATE | STEP | Description of NC Section A | Corrective Action Section B | | | Verification Section C | Approval Chief Eng | Approval QC Inspector |
| | | | Initial Chief Eng | Action Description Chief Eng | Sign & Date | | | |
| | | | | | | | | |
| | | | | | | | | |
| | | | | | | | | |

**NOTE:** Date & initial all entries

DEO ATTACHED

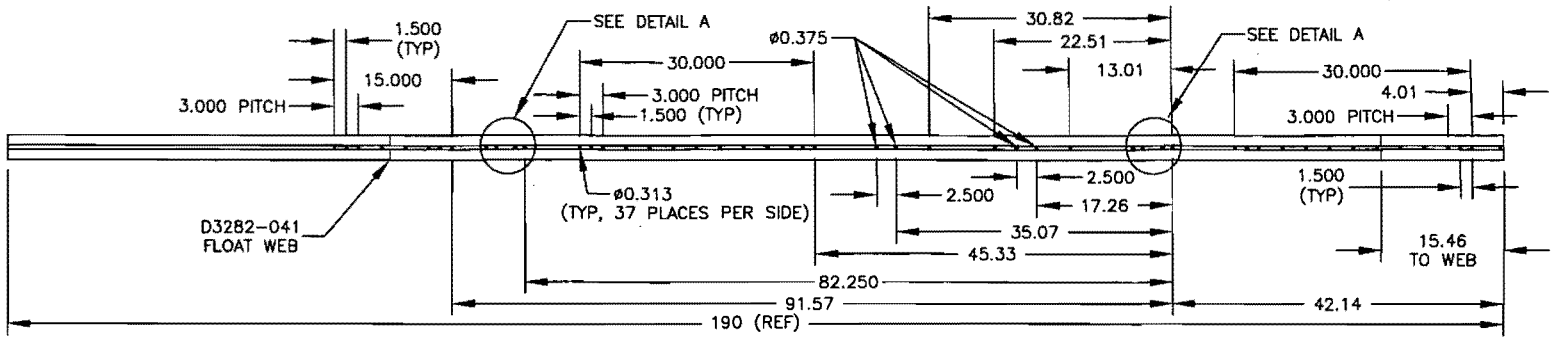


D3274-043 DRILLING/ASSEMBLY DETAIL

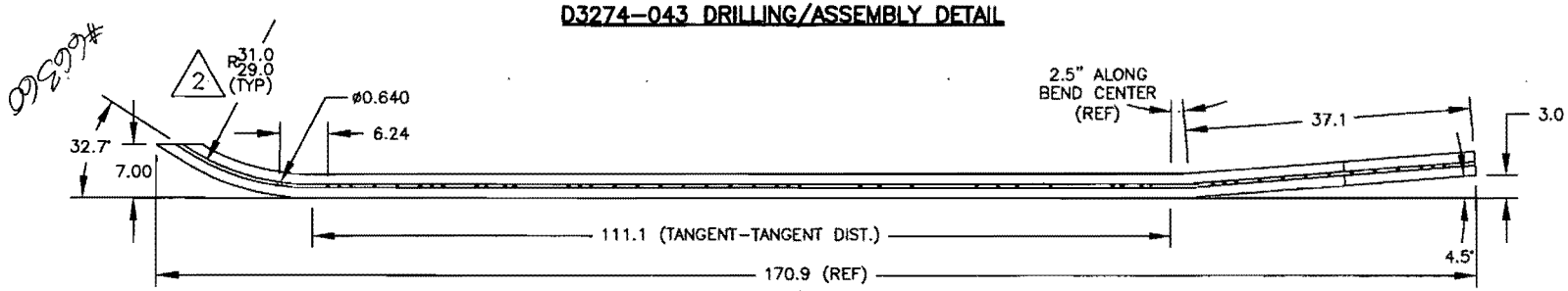


D3274-043 BEND/DRILLING DETAIL

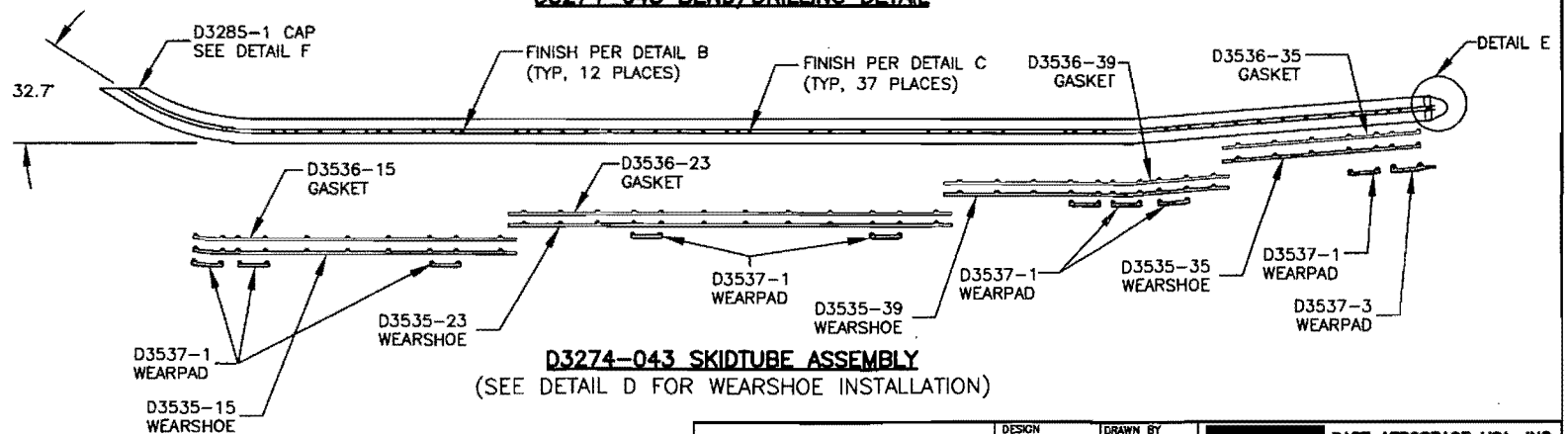


D3274-043 SKIDTUBE ASSEMBLY

(SEE DETAIL D FOR WEARSHOE INSTALLATION)

RELEASED
07.02.12

COPYRIGHT © 2004 BY DART AEROSPACE USA, INC.

THIS DOCUMENT IS PRIVATE AND CONFIDENTIAL AND IS SUPPLIED ON THE EXPRESS CONDITION THAT IT IS NOT TO BE USED FOR ANY PURPOSE OR COPIED OR COMMUNICATED TO ANY OTHER PERSON WITHOUT WRITTEN PERMISSION FROM DART AEROSPACE USA, INC.

| | | | |
|---|---|---|---|
| DESIGN CP | DRAWN BY PH | DART | DART AEROSPACE USA, INC. PORT HADLOCK, WA |
| CHECKED | APPROVED | DRAWING NO. D3274 | REV. D SHEET 3 OF 4 |
| DATE 06.12.19 | | TITLE SKIDTUBE ASSEMBLY | SCALE 1:15 |

Dart Aerospace Ltd

| W/O: | | WORK ORDER CHANGES | | | | | |
|---|---|---|---|---|---|---|---|
| DATE | STEP | PROCEDURE CHANGE | By | Date | Qty | Approval Chief Eng / Prod Mgr | Approval QC Inspector |
| | | | | | | | |
| | | | | | | | |

**Part No:** _____ **PAR #:** _____ **Fault Category:** _____ **NCR:** Yes No **DQA:** _____ **Date:** _____

**Resolution:** _____ **Disposition:** _____ **QA: N/C Closed:** _____ **Date:** _____

| NCR: | | WORK ORDER NON-CONFORMANCE (NCR) | | | | | | |
|---|---|---|---|---|---|---|---|---|
| DATE | STEP | Description of NC Section A | Corrective Action Section B | | | Verification Section C | Approval Chief Eng | Approval QC Inspector |
| | | | Initial Chief Eng | Action Description Chief Eng | Sign & Date | | | |
| | | | | | | | | |
| | | | | | | | | |
| | | | | | | | | |

**NOTE:** Date & initial all entries

## DETAIL A: DRILL DETAIL

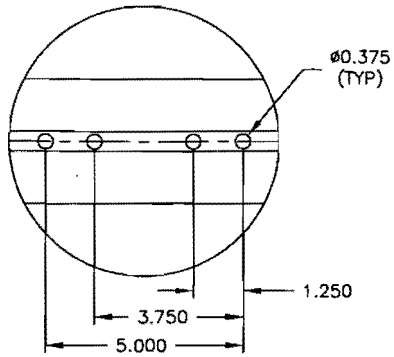


## DETAIL B
FOR ø0.375 HOLES ONLY

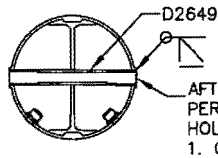


AFTER DRILLING AND BENDING ASSEMBLY PERFORM THE FOLLOWING FOR ø0.375 HOLES ONLY:
1. CHAMFER HOLE 0.030x45°
2. INSERT D2649 SPACER
3. WELD INTO PLACE AND GRIND FLUSH
4. C'BORE TO ø0.313x0.75 DEEP

## DETAIL C
FOR ø0.313 HOLES ONLY

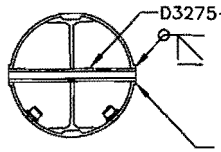


CHAMFER 0.030x45°
(TYP)

09697#

## DETAIL D

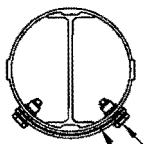

ALS7-1032-130 INSERT (1)
AN3C4A BOLT (1)
AN960C10L WASHER (1)
(78 PLACES)

GASKET/WEARSHOE/WEARPAD (REF)

## DETAIL F: END FINISHING DETAIL

CCR264SS3-3 RIVETS (2 PLACES)
INSTALL WITH LPS-3

CR3212-4-03 RIVETS (2 PLACES)
INSTALL WITH LPS-3

AN4C5A BOLT (1)
AN960C416 WASHER (1)
INSTALL WITH SIKAFLEX-241/-291

D3415-041 NUT PLATE,
LPS-3 ON FAYING SURFACE, LPS HARDCOAT ON EXTERIOR

D3413-1 RING

D3285-1 CAP (REF)

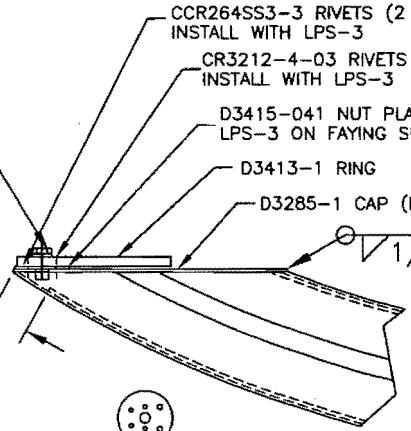


DETAIL F NOTES
1. CUT TUBE LEVEL
2. REMOVE RIDGE ON FWD SIDE
3. LOCATE D3285-1 (TRIM AS NECESSARY)
4. WELD D3285-1 IN PLACE PER DART QSI
5. GRIND FLUSH
6. RIVET D3415-041 NUT PLATE IN PLACE

NOTE: MASK THREADS IN D3415-041 PRIOR TO FINISH

## DETAIL E

AN3C4A BOLT (1)
AN960C10L WASHER (1)
NAS1515H3L WASHER (1)
(2 PLACES)
INSTALL WITH SIKAFLEX-241/-291

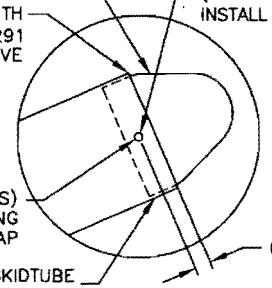


**DEO ATTACHE**

**RELEASED**
07.02.12

COPYRIGHT © 2004 BY DART AEROSPACE USA, INC.

THIS DOCUMENT IS PRIVATE AND CONFIDENTIAL AND IS SUPPLIED ON THE EXPRESS CONDITION THAT IT IS NOT TO BE USED FOR ANY PURPOSE OR COPIED OR COMMUNICATED TO ANY OTHER PERSON WITHOUT WRITTEN PERMISSION FROM DART AEROSPACE USA, INC.

| | | | |
|---|---|---|---|
| DESIGN: CP | DRAWN BY: PH | DART | DART AEROSPACE PORT HADLOCK, |
| CHECKED: | APPROVED: | DRAWING NO. D3274 | |
| DATE: 06.12.19 | | TITLE: SKIDTUBE ASSEMBLY | |

Dart Aerospace Ltd

| W/O: | | WORK ORDER CHANGES | | | | | |
|---|---|---|---|---|---|---|---|
| DATE | STEP | PROCEDURE CHANGE | By | Date | Qty | Approval Chief Eng / Prod Mgr | Approval QC Inspector |
| | | | | | | | |
| | | | | | | | |

**Part No:** _____ **PAR #:** _____ **Fault Category:** _____ **NCR:** Yes No **DQA:** _____ **Date:** _____

**Resolution:** _____ **Disposition:** _____ **QA: N/C Closed:** _____ **Date:** _____

| NCR: | | WORK ORDER NON-CONFORMANCE (NCR) | | | | | | |
|---|---|---|---|---|---|---|---|---|
| DATE | STEP | Description of NC Section A | Corrective Action Section B | | | Verification Section C | Approval Chief Eng | Approval QC Inspector |
| | | | Initial Chief Eng | Action Description Chief Eng | Sign & Date | | | |
| | | | | | | | | |
| | | | | | | | | |
| | | | | | | | | |

**NOTE:** Date & initial all entries

H:\fFORMS\Quality Assurance\approved QA\NCRWO RevE

| DRAWING NO. | TITLE | REV. D | DART AEROSPACE USA, INC | D.E.O. NO. | SHEET NO. | SCALE |
|---|---|---|---|---|---|---|
| D3274 | SKIDTUBE ASSEMBLY | | ENGINEERING ORDER | D3274-D-1 | SHEET 1 OF 1 | NTS |
| DRAWN | CHECKED | | MFG. APPR. | APPROVED | DE APPR. | |
| DATE 09.06.17 | DATE 09.06.23 | | DATE 09/06/23 | DATE 09/06/23 | DATE 09.06.23 | |

LPS-3 IS NO LONGER USED DURING ASSEMBLY OF SKIDTUBE.

AMEND NOTE 8: "~~SPRAY INSIDE OF TUBE WITH A COAT OF LPS LABORATORIES 'LPS 3' AFTER FINISH AND INSTALLATION OF INSERTS.~~ COAT ALL EXPOSED FASTENERS WITH LPS LABORATORIES 'LPS PROCYON' AFTER FINAL ASSEMBLY, CLEAN EXCESS OFF POWDER COATING WITH MEK DEGREASER."

AMEND DETAIL F AS SHOWN:

09E997

## DETAIL F: END FINISHING DETAIL

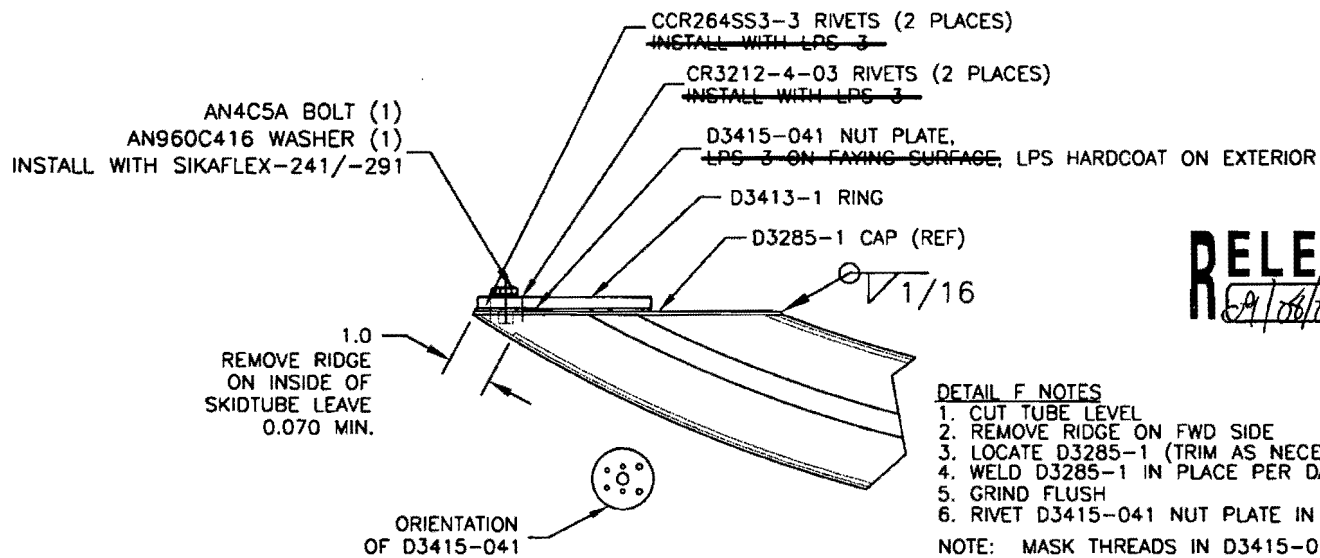


RELEASED 09/06/23

DETAIL F NOTES
1. CUT TUBE LEVEL
2. REMOVE RIDGE ON FWD SIDE
3. LOCATE D3285-1 (TRIM AS NECESSARY)
4. WELD D3285-1 IN PLACE PER DART QSI 004
5. GRIND FLUSH
6. RIVET D3415-041 NUT PLATE IN PLACE

NOTE: MASK THREADS IN D3415-041 PRIOR TO FINISH

COPYRIGHT © 2009 BY DART AEROSPACE USA, INC
THIS DOCUMENT IS PRIVATE AND CONFIDENTIAL AND IS SUPPLIED ON THE EXPRESS CONDITION THAT IT IS NOT TO BE USED FOR ANY PURPOSE OR COPIED OR COMMUNICATED TO ANY OTHER PERSON WITHOUT WRITTEN PERMISSION FROM DART AEROSPACE USA, INC.

NO. 252

# AWS D17.1.2001
## QUALIFICATION TEST RECORD

**Name:** Barclay Elliott
**Job number:** 663758
**Part number:** D206 642 541
**Description:** 206
**Welding Process:** Tig[X] Mig[ ]
**Base materiel:** Aluminum
**Current:** AC[X] DC[ ]

## TEST REQUIREMENTS AND RESULTS

| | | |
|---|---|---|
| **Visual:** | pass[X] | fail[ ] |
| **Penetration:** | pass[X] | fail[ ] |

**UNACCEPTABLE**

| | | |
|---|---|---|
| **Cracks:** | pass[X] | fail[ ] |
| **Undercut:** | pass[X] | fail[ ] |
| **Pin holes:** | pass[X] | fail[ ] |
| **Overlap (cold lap)** | pass[X] | fail[ ] |
| **Porosity (surface):** | pass[X] | fail[ ] |
| **Coloration:** | pass[X] | fail[ ] |

**Qualifier** Pat Lewis **Date of Test Coupon** 11-05-09

**Welder** Barclay Elliott **Date of Test Coupon** 11-05-09

The above named individual is qualified in accordance with AWS D17.1.2001 to weld